SYSTEMS WITH SWING DOOR FLUSH WITH WALL

BATTENTE CINQUANTA

PULL or PUSH swing door - wall thickness i90 c75 mm and higher

CONTENT OF THE PACKAGE

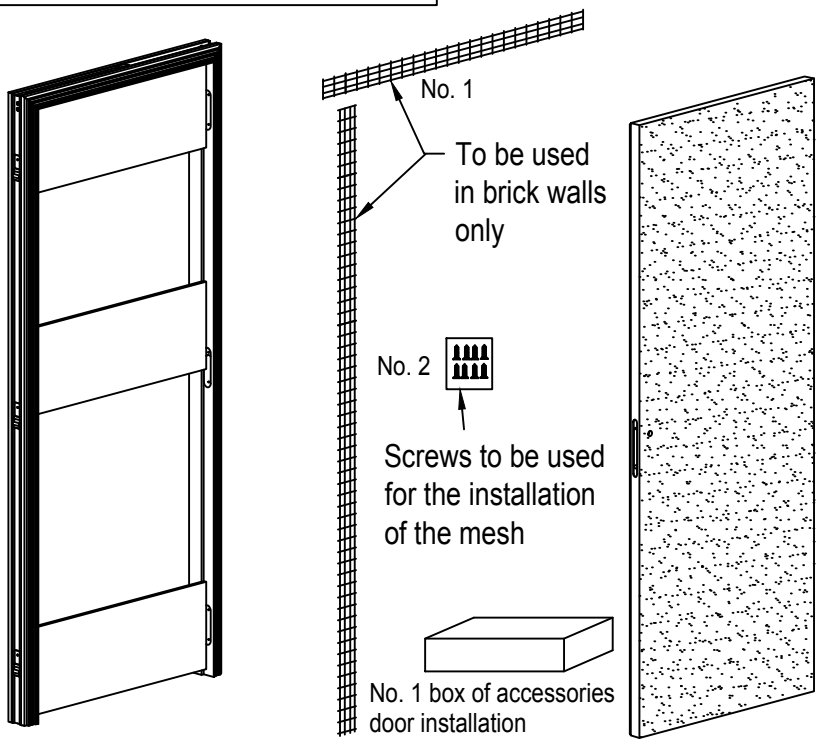

CONTENT OF THE BOX OF ACCESSORIES FOR DOOR INSTALLATION

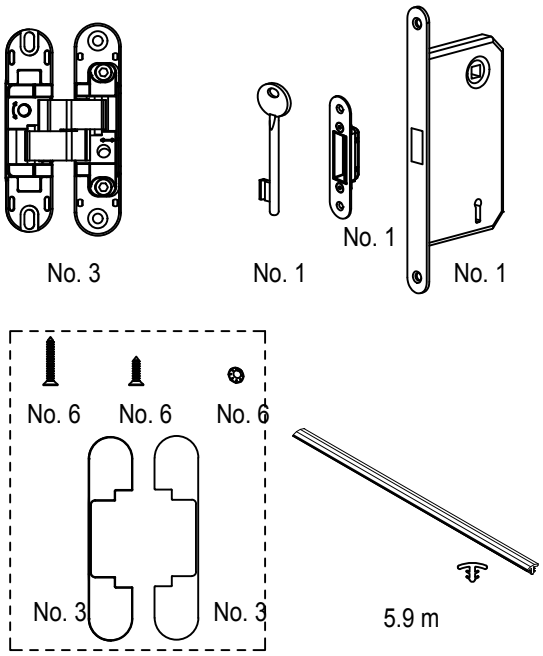

OPENING TYPES

PUSH OPENING

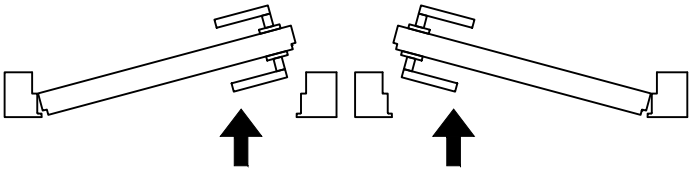

LH “Push” Model RH “Push” Model

PULL OPENING

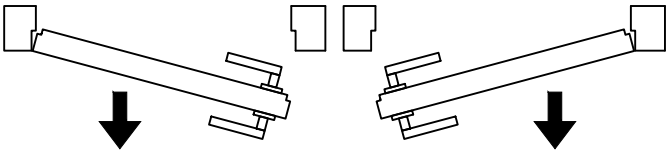

LH “Pull” Model RH “Pull” Model

Ces informations sont remises a titre indicatif. SCRIGNO S.p.A. Unipersonale decline toute responsabilite en cas d'erreur d'impression, de traduction, ou pour tout autre motif. Elle se reserve le droit d'apporter toute modification pour le montage et l'amelioration du produit sans preavis. Toute reproduction meme partielle de ce document est formellement interdite.

Los datos publicados son indicativos. La sociedad SCRIGNO S.p.A. Unipersonale declina toda responsabilidad por los posibles errores contenidos, debido a errores de imprenta, de transcripcion o cualquier otro motivo y se reserva el derecho de mejorar los productos sin previo aviso. La reproduccion total o parcial esta prohibida por la ley.

I dati pubblicati sono indicativi. Scrigno S.p.A. Unipersonale declina ogni responsabilita' per le possibili inesattezze contenute, dovute ad errori di stampa, di trascrizione o per qualsiasi altro motivo e si riserva il diritto di apportare modifiche atte a migliorare i prodotti senza preavviso. La riproduzione anche parziale é severamente vietata a norme di legge.

The information given in this document is for descriptive purposes only. SCRIGNO S.p.A. Unipersonale will not be held responsible for any inaccuracies caused by printing errors,transcription errors or for any other reason,and reserves the right to make modifications, without giving prior notice,for the improvement of its products. The reproduction,including the partial reproduction,of this document is severely prohibited within the terms of the Law.

Bei den veröffentlichten Daten handelt es sich um Richtwerte. Die Scrigno S.p.A. Unipersonale lehnt jegliche Haftung für auf Druckfehler oder andere Ursachen zurückzuführende Ungenauigkeiten ab, und behält sich das Recht vor, jederzeit ohne Vorankündigung Verbesserungen am Produkt vorzunehmen. Der Nachdruck ist auch auszugweise gesetzlich untersagt

SCRIGNO

Scrigno S.p.A. Unipersonale
Via Casale, 975 - 47822 - Sant'Ermete di Santarcangelo (RN) - Italy
Tel.+39 0541 757711 - Fax +39 0541 757780
www.scrigno.net e-mail: scrigno@scrigno.it

INSTALLATION IN BRICK WALLS

HORIZONTAL SECTION

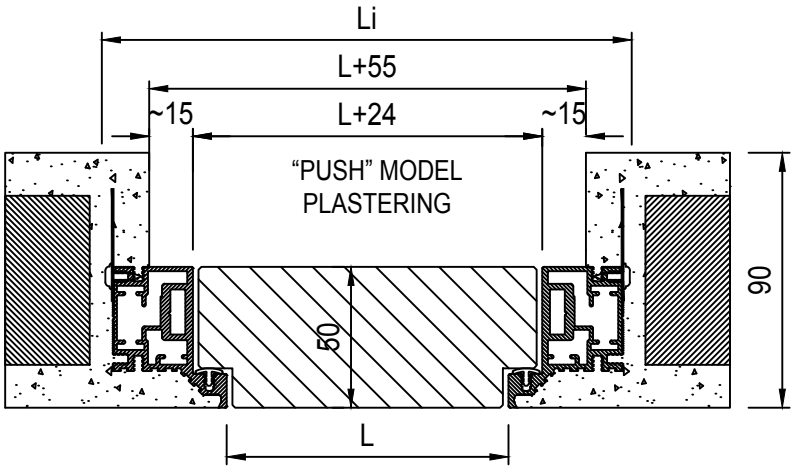

VERTICAL SECTION

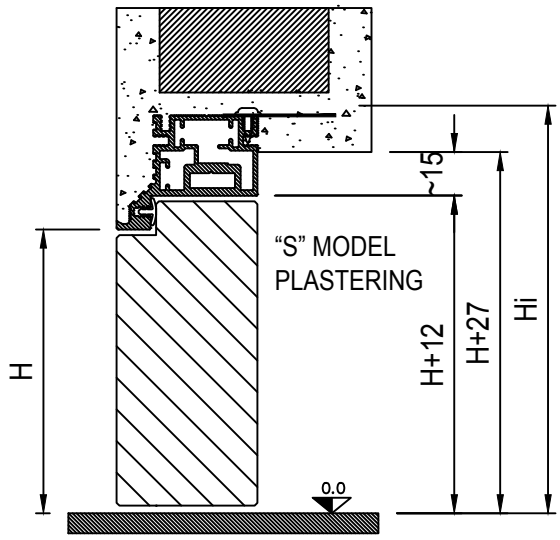

HORIZONTAL SECTION

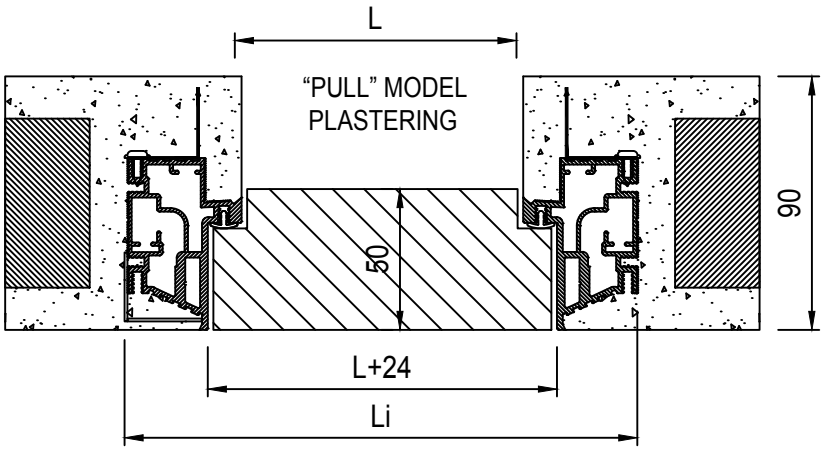

VERTICAL SECTION

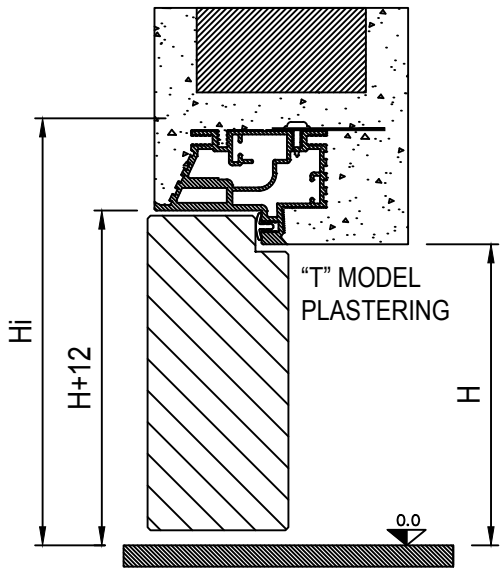

Opening		Overall dimensions		Finished wall
Width L	Height H	Width Li	Height Hi	
600	2100	690	2145	90 plastering
700		790		
800		890		
900		990		

INSTALLATION IN BRICK WALLS

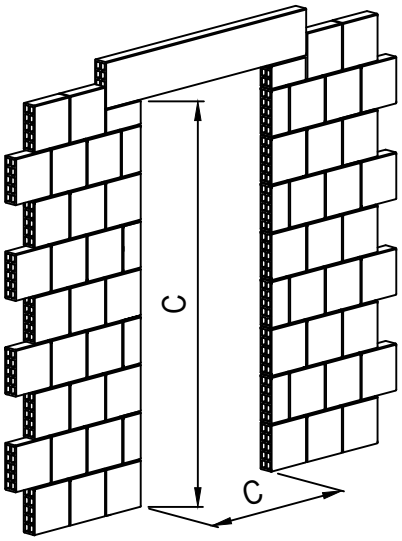

1

Prepare the compartment to accommodate the frame as shown on the previous page. **Wall hole dimensions:** arrange a clearance of 30/40 mm in width and 20/25mm in height **as compared to the floor level**.

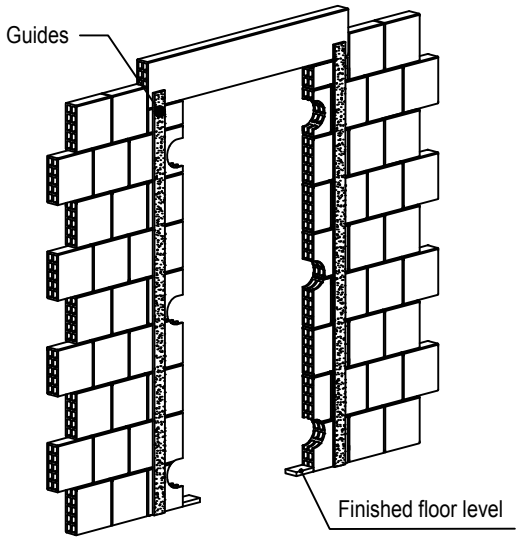

2

Create the supports for the frame at the finished floor level. Arrange guides, for the trowel application of the plastering. Break the compartment near the masonry clamps.

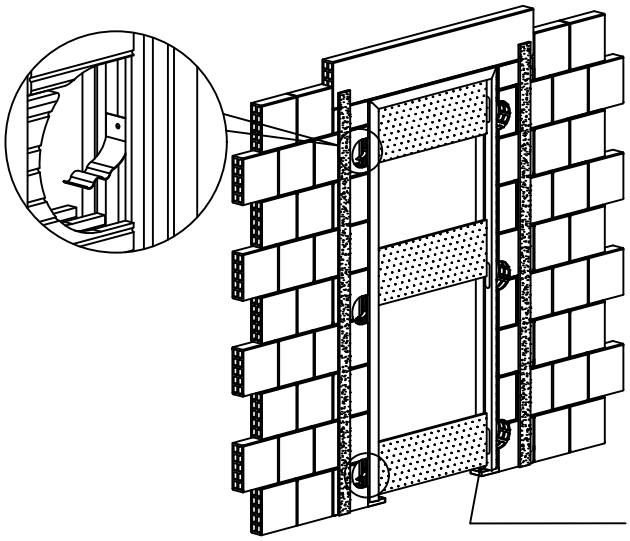

3

Fold back the metal clamps attached to the frame. Position the frame making sure to align the level and plane. **CAUTION: The lower base of the frame must be flush with the finished floor**.

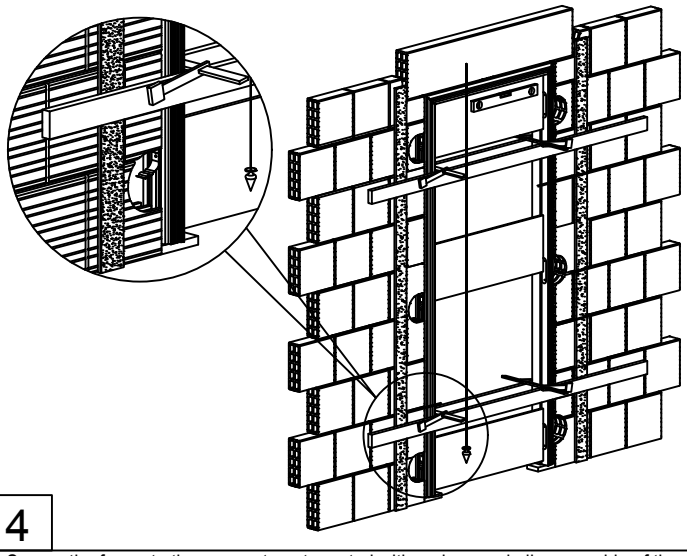

4

Secure the frame to the compartment created with springs and align one side of the frame flush with the finished wall.
Secure with clamps, recheck alignment, levelling and frame plane. Lock the frame with quick-setting cement points in the clamps and in sections along the perimeter parts.

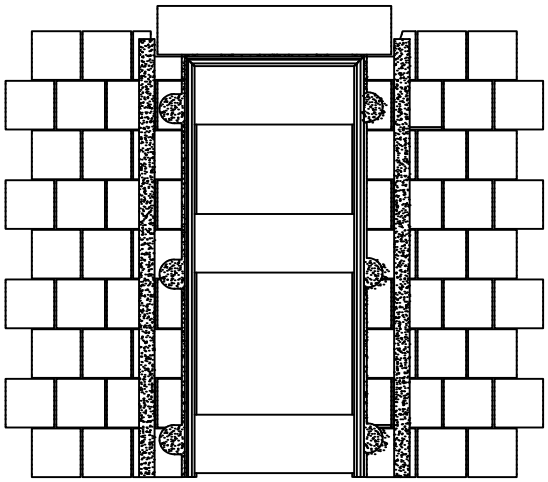

5

Fill the gaps between the aluminium frame and the raw wall with cement mortar, taking care not to cause movement, and wait for the mortar to dry.

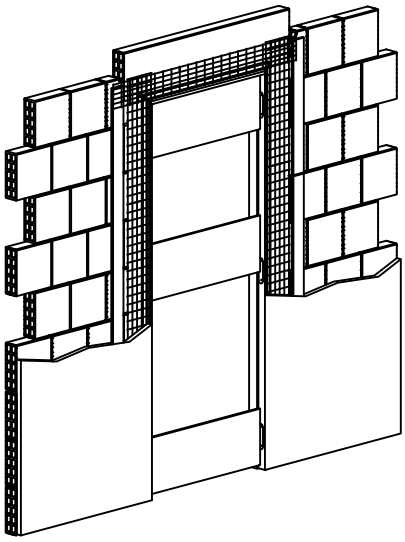

6

Apply the fine mesh in the position shown in the figure. Apply the plastering. Strictly respect the plastering flush determined by the frame itself. **Caution: overlaying the plastering flush given by the aluminium frame affects the correct functioning of the panel and eliminates the aesthetic effect of flatness between wall and panel. Caution: remove the stiffening spacers only when the plastering has cured**

INSTALLATION IN PLASTERBOARD WALLS

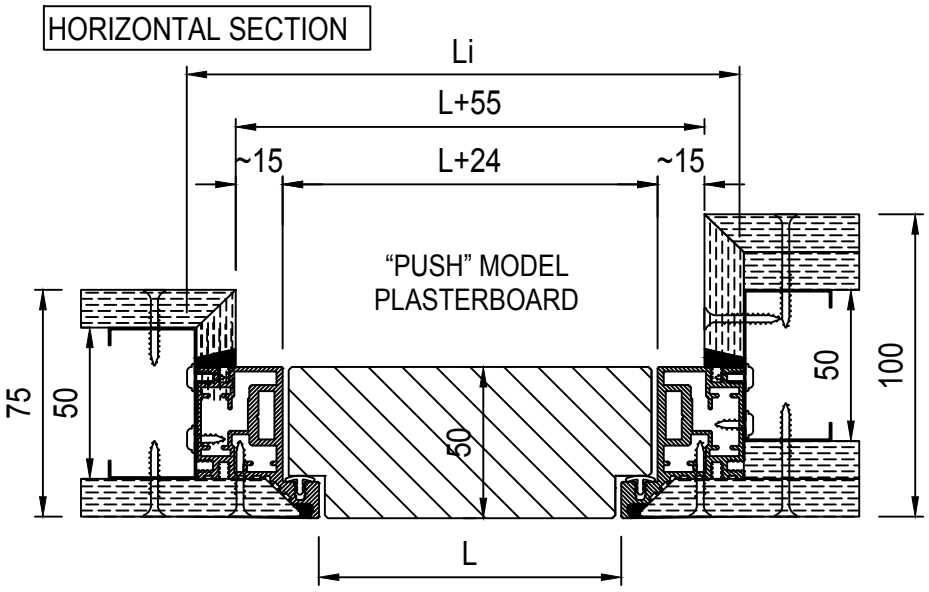

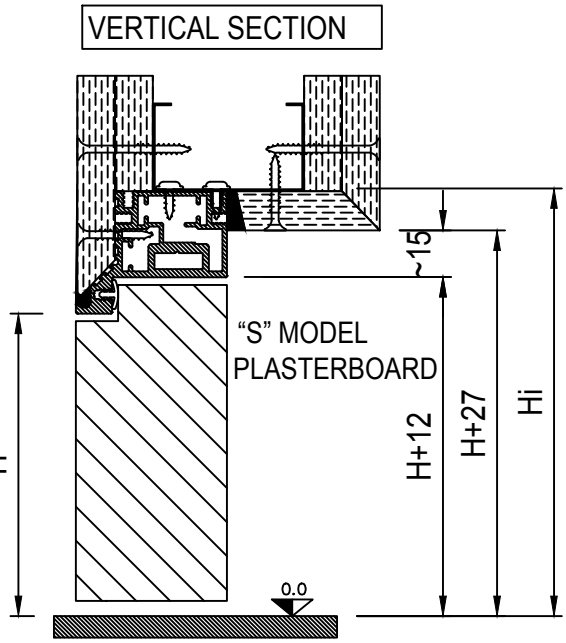

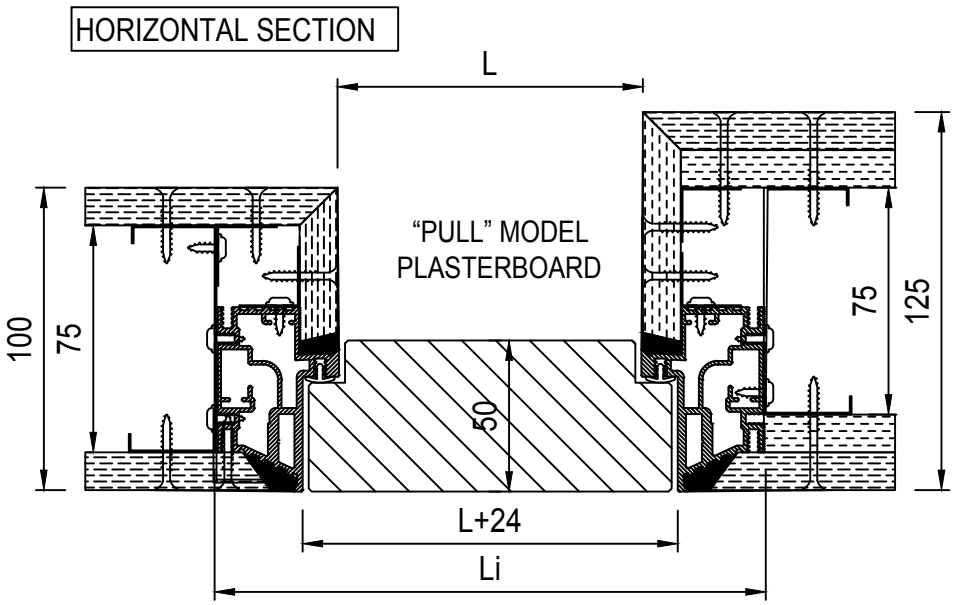

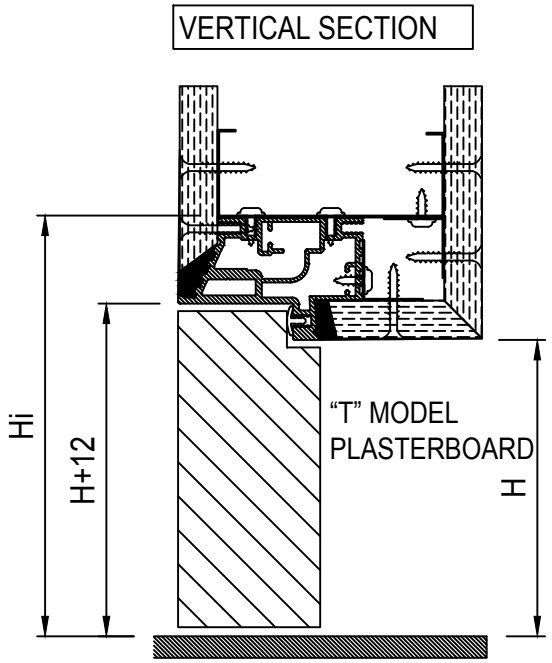

Opening		Overall dimensions		Finished wall
Width L	Height H	Width Li	Height Hi	
600	2100	690	2145	75 plasterboard and higher
700		790		
800		890		
900		990		

INSTALLATION IN PLASTERBOARD WALLS

Prepare the compartment to accommodate the frame as shown on the previous page.

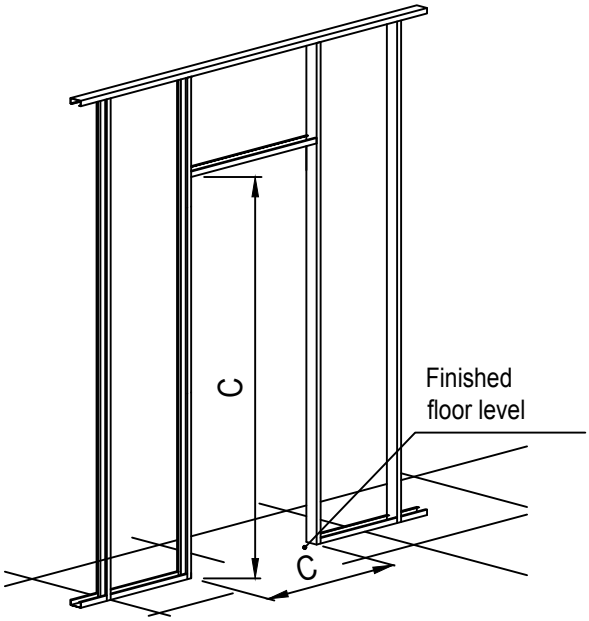

1

Position the frame making sure to align the level and plane. Align the frame to the created compartment, secure it with clamps, make sure the frame is aligned and levelled again. Fasten the frame with screws along the vertical uprights and the upper cross member.

CAUTION: The lower base of the frame must be flush with the finished floor.

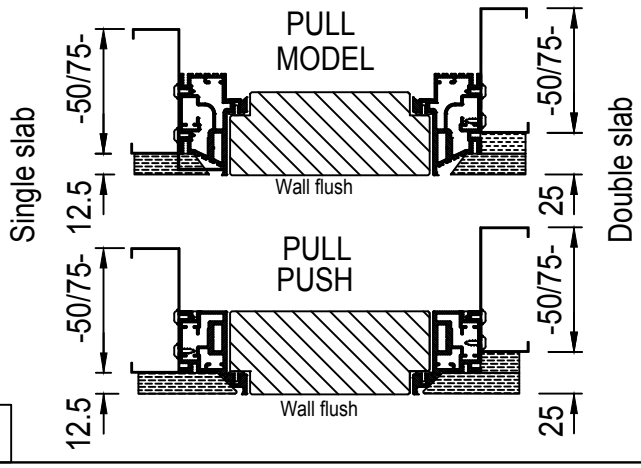

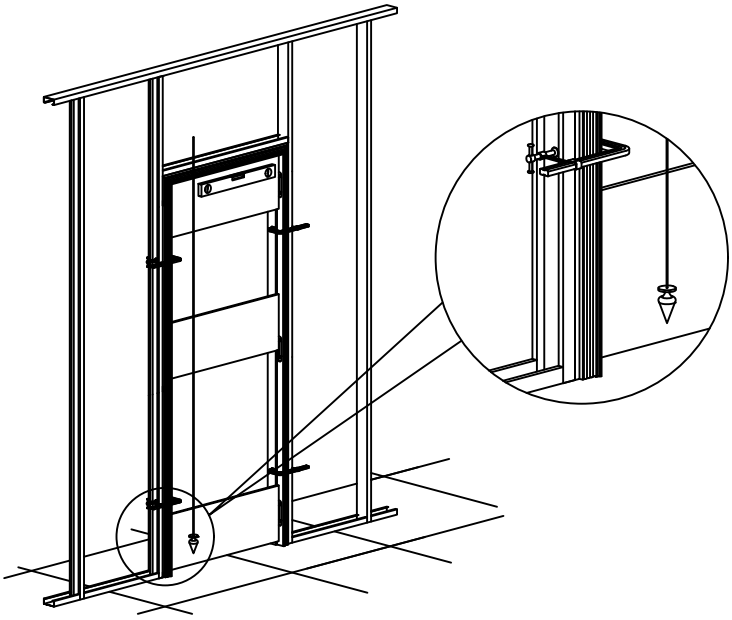

2

Position the plasterboard slabs, secure them with screws to the frame and plasterboard structure. Apply the fine mesh for joints and grout. Connect the profiles that delimit the opening to the wall by rendering.

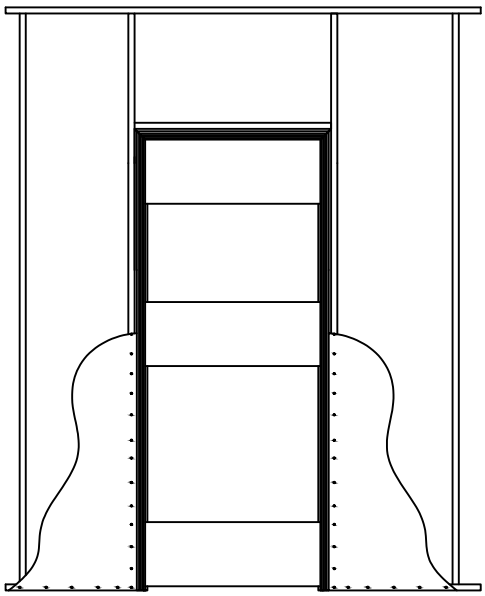

3

DOOR INSTALLATION AND PAINTING

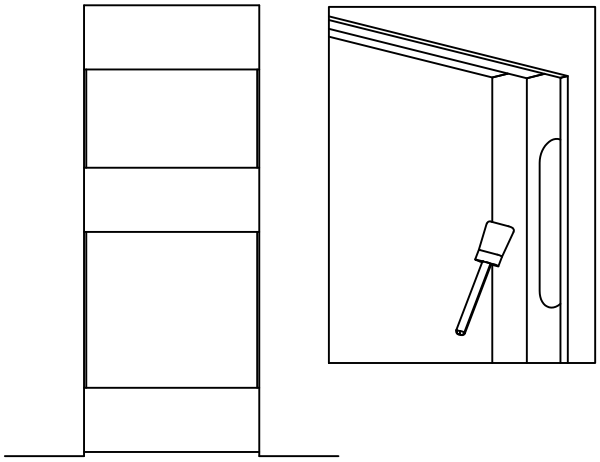

1

Remove the wooden spacers. Grout the screw holes. Clean the aluminium frame from any cement residue, then colour. Apply suitably diluted cementite as first coat. Install the gasket in the perimeter of the entire frame. **Caution: avoid heavy thicknesses or accumulation of paint which could affect the movement of the panel.**

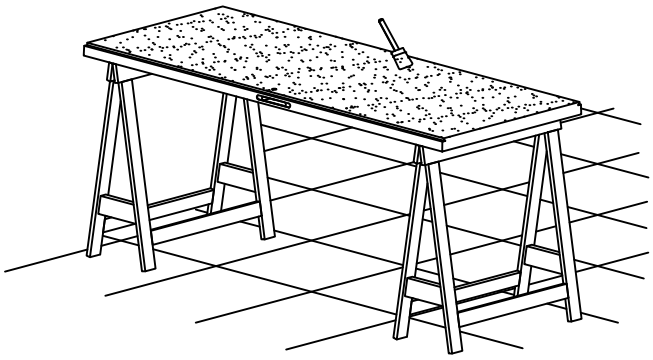

2

Clean the panel thoroughly and finish with a light application of paint. **Important:** every type of application (e.g. painting, wallpaper application, etc.) must always be carried out on **both sides equally**. **Caution: avoid heavy thicknesses or accumulation of paint in the edges which could affect the movement of the panel.**

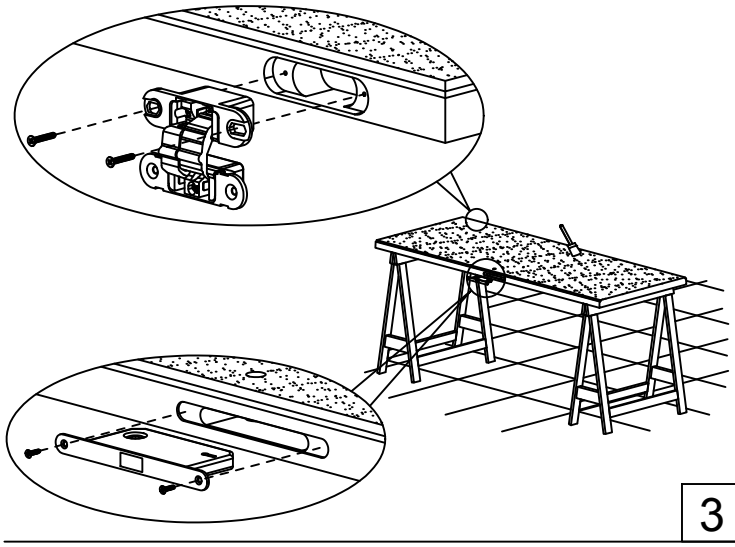

3

Clean the hinge and lock housings of any traces of paint.
Install the lock and the hinges.

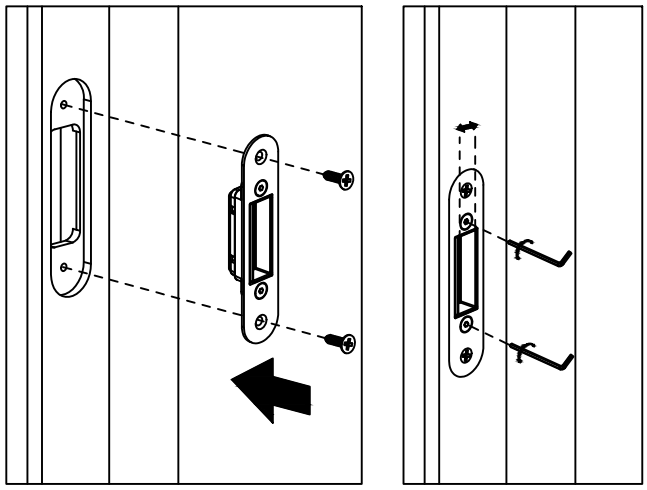

4

Clean any traces of paint inside the housings. Secure the lock striker with the screws provided. The adjustable striker has Allen screws for lateral adjustment of the internal bushing on the gasket socket.

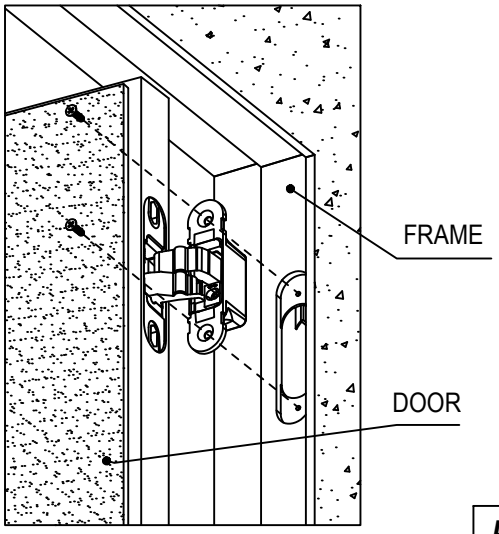

5

Position the panel at the hinge holes on the frame.
Secure with the screws provided.

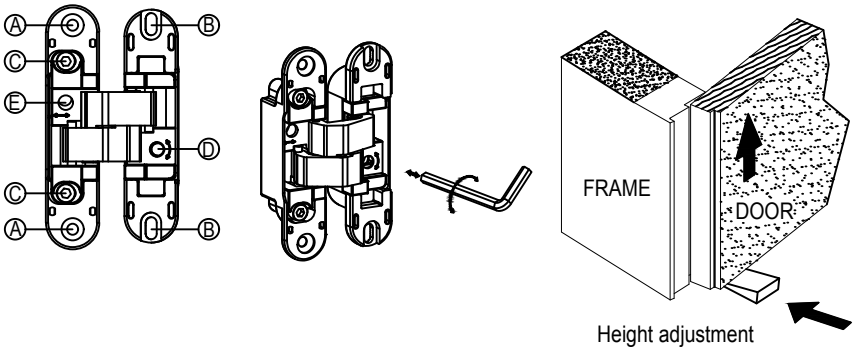

6

Adjust the movement and clearance between frame and door by adjusting the three axes of the hinges. Start adjusting from the top hinge. **Height adjustment:** insert a wedge under the door, loosen the screws in point (B), push the wedge under the door to reach the desired opening, tighten the screws (B) (± 2.5 mm). **Depth adjustment:** loosen the screws in point (C), use the wrench on the cam (E) (±1 mm). Once the work is completed, tighten the screws (C) and apply the panels covering the hinges. **Side adjustment:** turn the screw (D) clockwise and counterclockwise; the door moves by ±1.5 mm.